TAS5720M Evaluation Board

User's Guide

Literature Number: SLOU437
December 2015

Introduction

To help the user investigate and evaluate the TAS5270M performance and capabilities, a fully populated evaluation board has been created. This board is shown in Figure 1-1. Connected to a PC, an external power supply (4.5 V ≤ PVDD ≤ 26.4 V) and a signal source, the TAS5270M Evaluation Board easily exercises the amplifier's features.

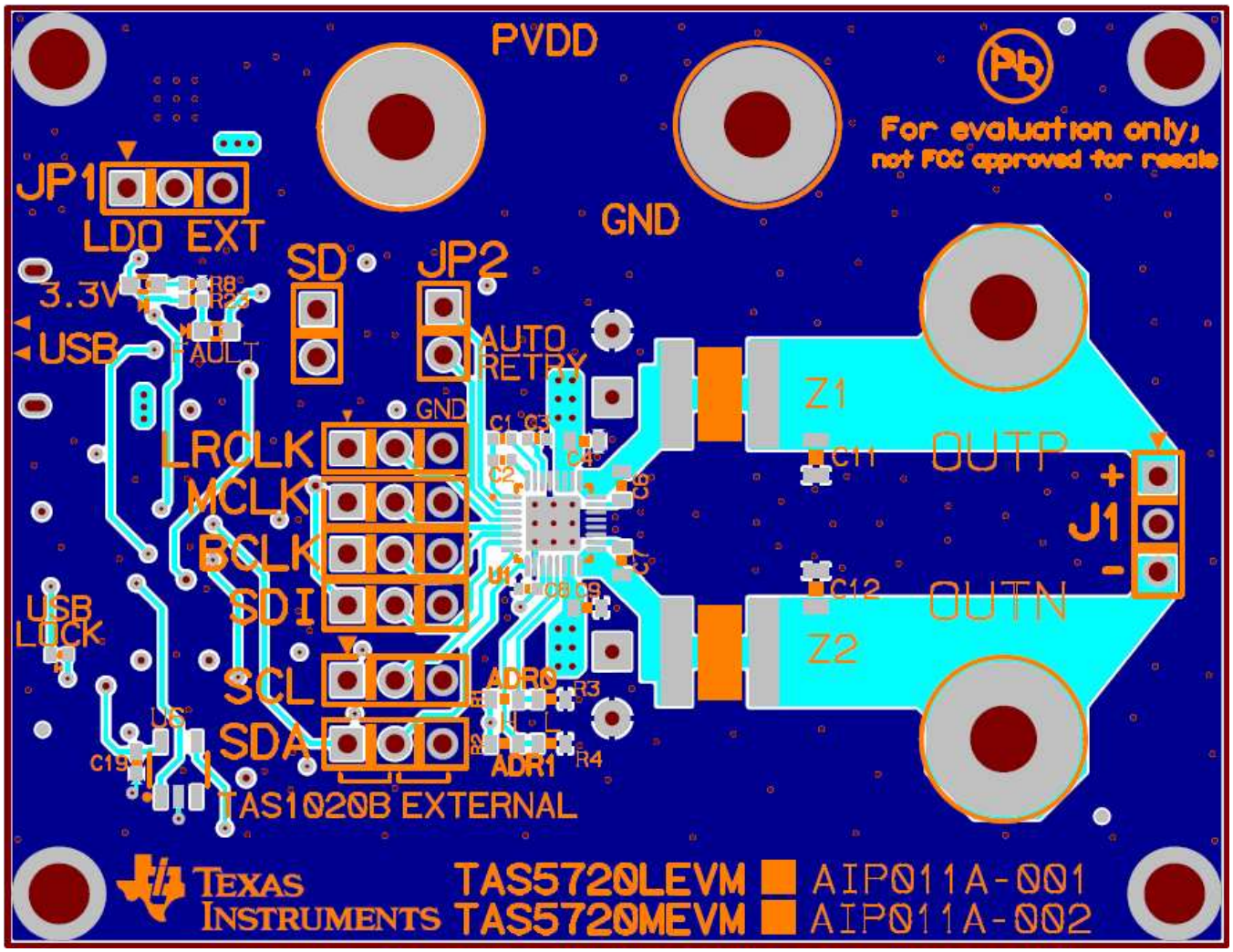

Figure 1-1. TAS5720M Evaluation Board

Copyright © 2015, Texas Instruments Incorporated

Quick Start Guide

1. Ensure all the jumpers are set correctly according to Table 2-1 and Figure 2-1.
2. Connect a speaker's positive output terminal and negative output terminal respectively to OUTP (RED) and OUTN (BLACK) on the EVM board. Be careful not to mix up OUTP and PVDD terminals, since the colors are the same. The same applies to OUTN and GND terminals.
3. Connect a power supply (4.5 V-26.4 V) and ground reference respectively to PVDD (RED) and GND (BLACK) on the EVM board.
4. Connect a micro USB cable to EVM and PC to generate 3.3 V supply.
5. Go to **Control Panel**, **Sound** and select **USB-AudioEVM** under the **Playback** tab. Click on **Set Default** to make it the default playback device. Click on **Properties** and under the **Advanced** tab, make sure that the **Default Format** is shown as 2 channel, 16 bit, 48000 Hz (DVD Quality) in Figure 2-2 below.
6. Power on the power supply after checking that all the connections are correctly.
7. Load a music file in the Windows Media Player. Play that audio file and listen to the output.

Table 2-1. TAS5720MEVM Default Jumper Settings

Jumper	Position	Comments
JP1	LEFT SIDE	Use LDO +3.3 V
JP2	IN	Enable Auto-Retry
SD	OUT	Keep device active
LRCLK	LEFT SIDE	Connect LRCLK to TAS5720M
MCLK	LEFT SIDE	Connect MCLK to TAS5720M
BCLK	LEFT SIDE	Connect BLK to TAS5720M
SDI	LEFT SIDE	Connect SDI to TAS5720M
SCL	LEFT SIDE	Connect SCL to TAS5720M
SDA	LEFT SIDE	Connect SDA to TAS5720M

Copyright © 2015, Texas Instruments Incorporated

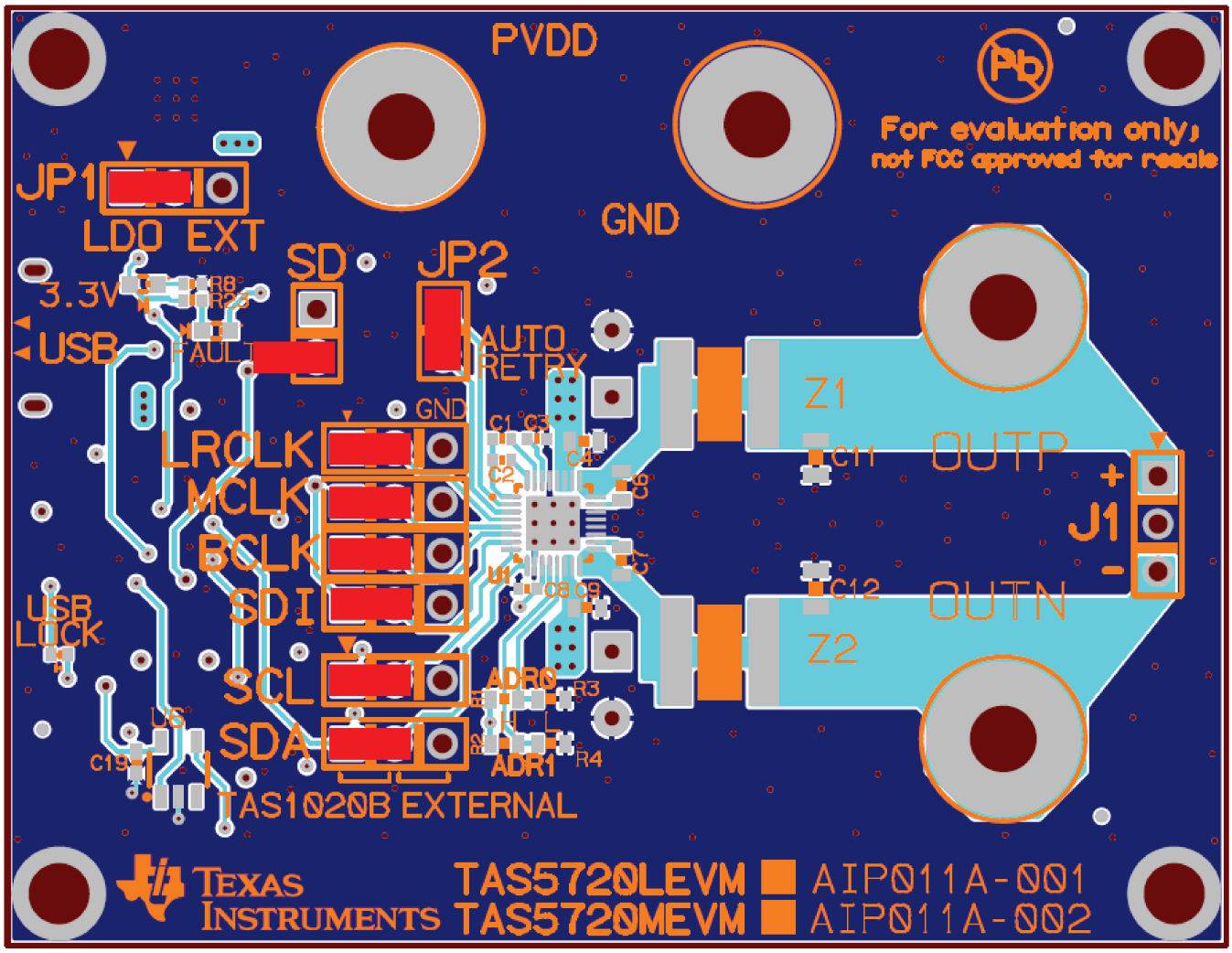

Figure 2-1. TAS5720MEVM Default Jumper Settings

Copyright © 2015, Texas Instruments Incorporated

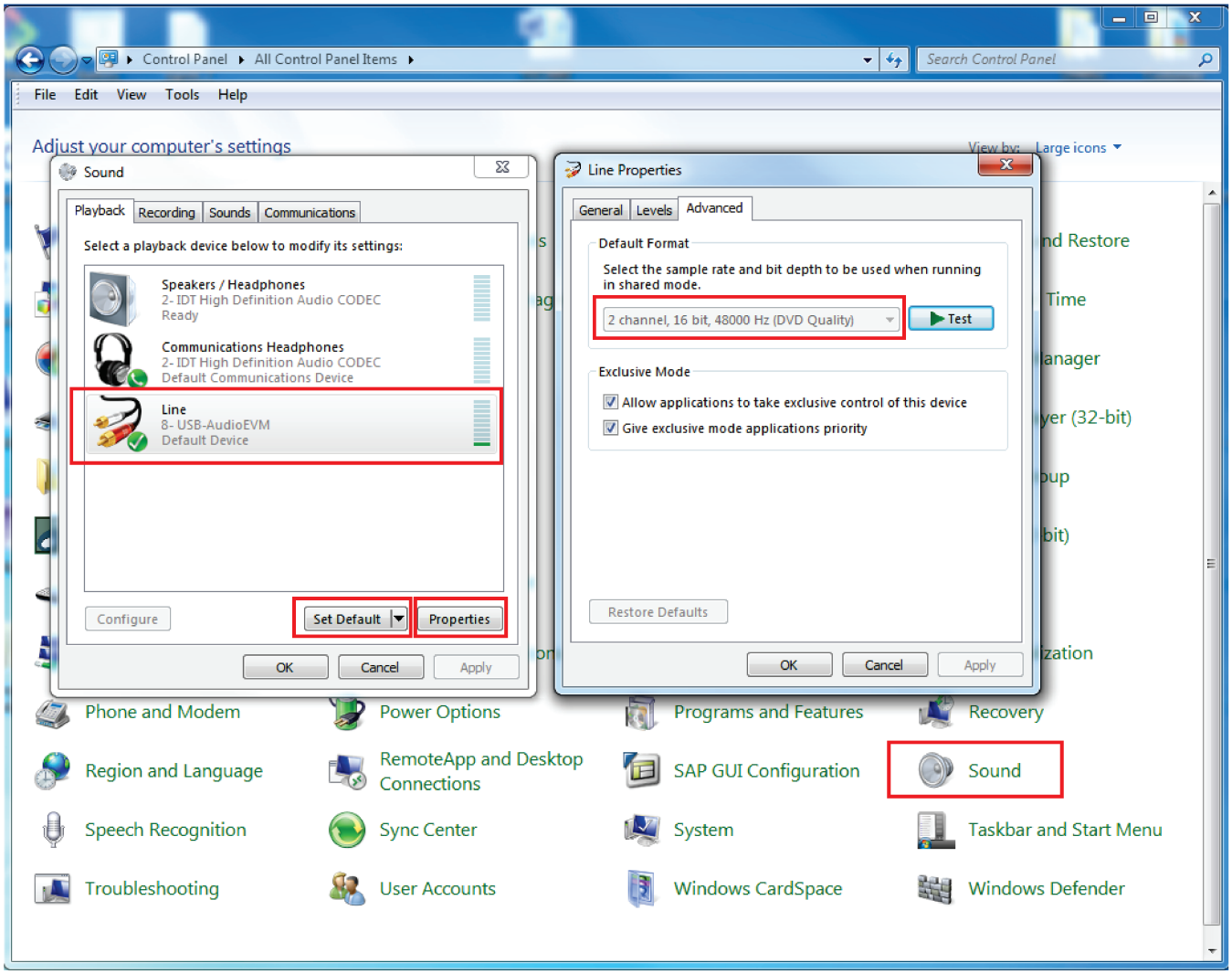

Figure 2-2. Default Format

Copyright © 2015, Texas Instruments Incorporated

General Description

The TAS5720M device is a high-efficiency mono Class-D audio power amplifier optimized for high transient power capability to use the dynamic power headroom of small loudspeakers. It is capable of delivering more than 15-W continuously into a 4-Ω speaker. The device has two address pins, which allow up to 8 I2C addressable devices to share a common TDM bus.

The TAS5720M device SAIF supports a variety of standard stereo serial audio formats including I2S, Left Justified and Right Justified. It also supports a time division multiplexed (TDM) format that is capable of transporting up to 8 channels of audio data on a single bus.

Copyright © 2015, Texas Instruments Incorporated

Operating Conditions

Table 4-1. Operating Conditions

PVDD and AVDD	4.5 V to 26.4 V
DVDD	3.0 V to 3.6 V
Minimum speaker load	3.2 Ω
I2C Clock Frequency	Up to 400 kHz

Copyright © 2015, Texas Instruments Incorporated

PCB Layout Guidelines

- Pay special attention to the power stage power supply layout. Each H-bridge has two PVDD input pins so that decoupling capacitors can be placed nearby. Use at least a 0.1-µF capacitor of X5R quality or better for each set of inputs.
- Keep the current circulating loops containing the supply decoupling capacitors, the H-bridges in the device and the connections to the speakers as tight as possible to reduce emissions.
- Use ground planes to provide the lowest impedance for power and signal current between the device and the decoupling capacitors. The area directly under the device should be treated as a central ground area for the device, and all device grounds must be connected directly to that area.
- Use a via pattern to connect the area directly under the device to the ground planes in copper layers below the surface. This connection helps to dissipate heat from the device.
- Avoid interrupting the ground plane with circular traces around the device. Interruption disconnects the copper and interrupt flow of heat and current. Radial copper traces are better to use if necessary.

Copyright © 2015, Texas Instruments Incorporated

Reference

This section includes the EVM schematic, board layout and BOM.

6.1 TAS5720MEVM Schematic

Figure 6-1 and Figure 6-2 illustrate the schematic for the TAS5720MEVM.

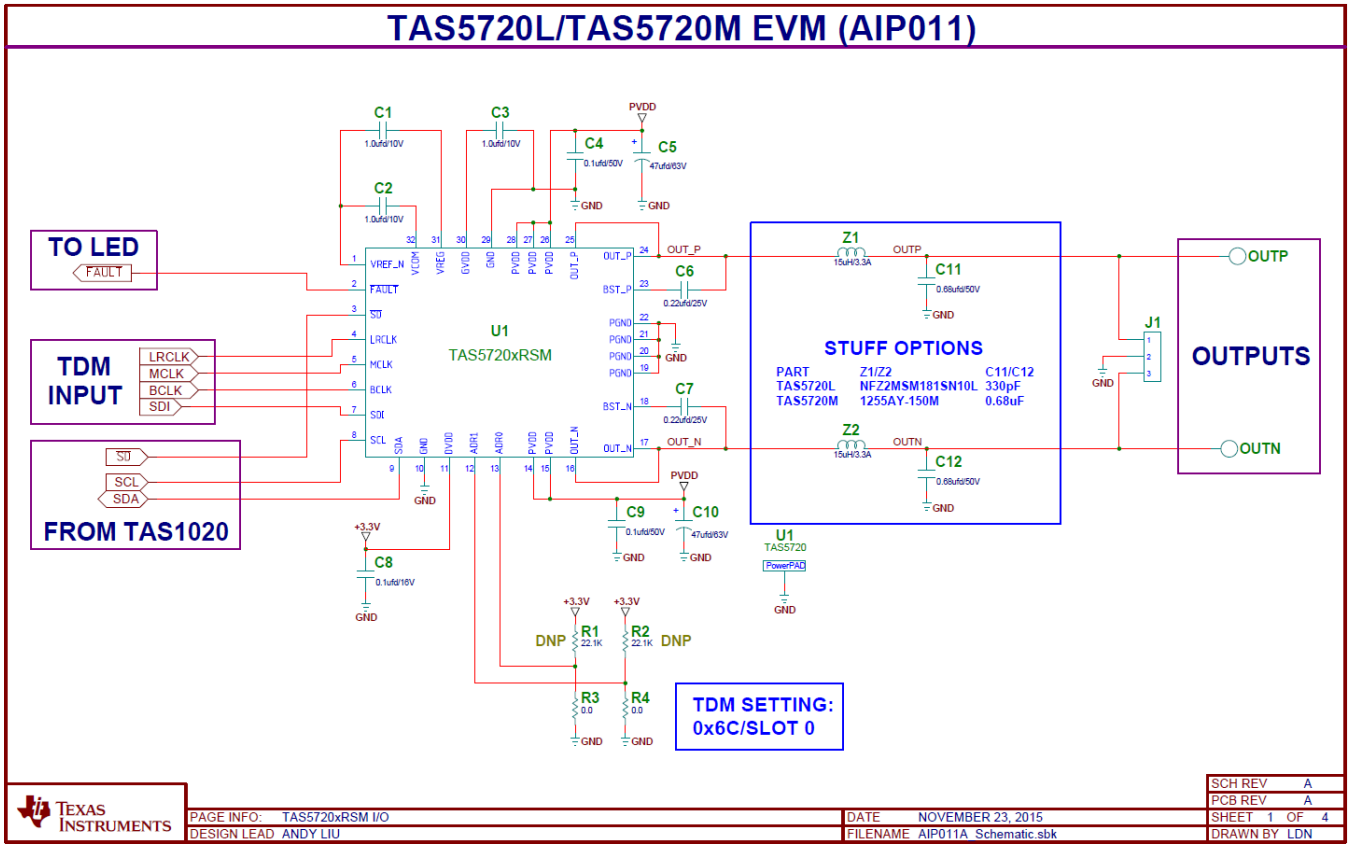

Figure 6-1. TAS5720MEVM Schematic (1 of 2)

Copyright © 2015, Texas Instruments Incorporated

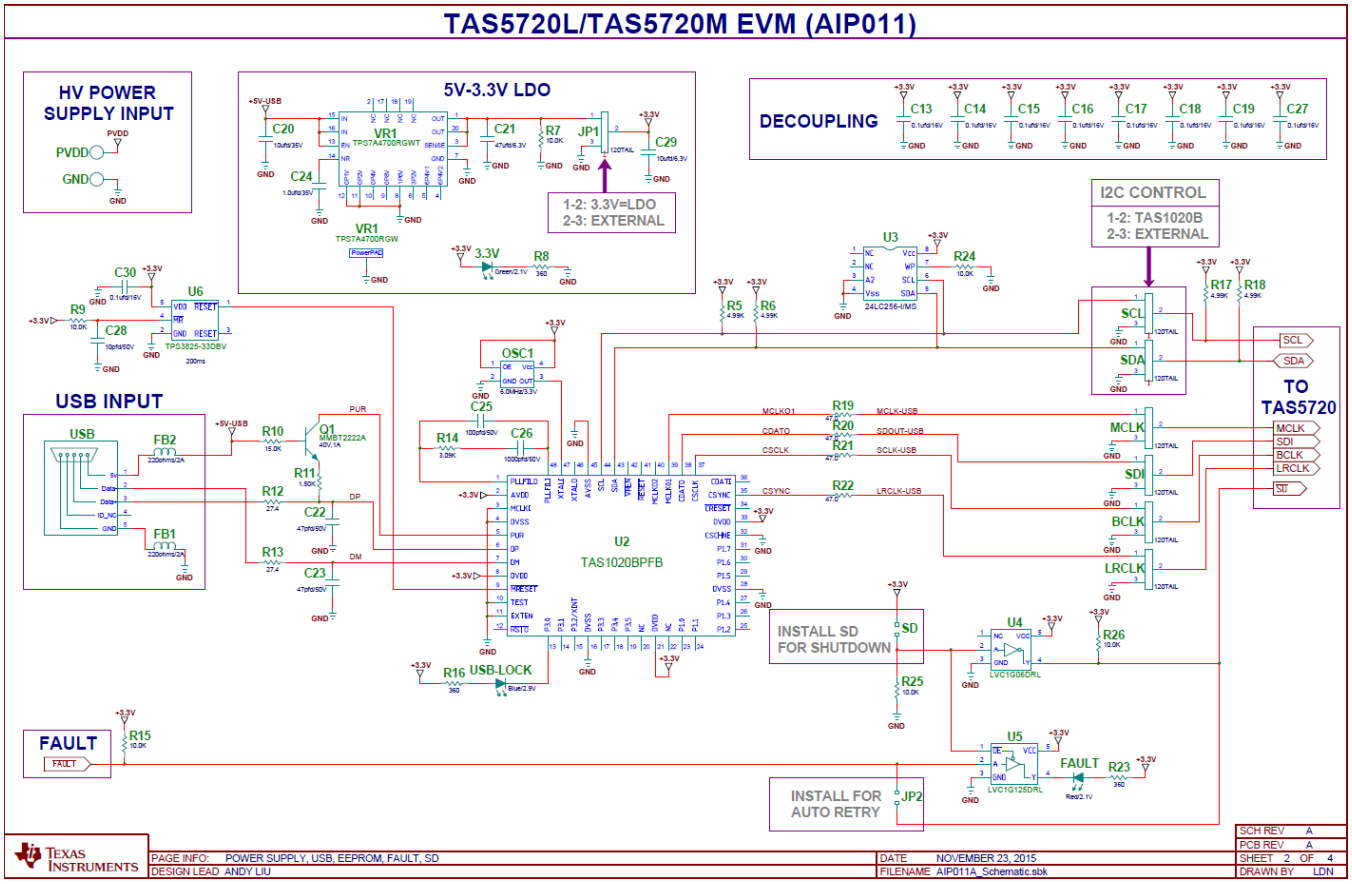

Figure 6-2. TAS5720MEVM Schematic (2 of 2)

6.2 TAS5720MEVM PCB Layout

Figure 3 through Figure 12 illustrate the PCB layouts for this EVM.

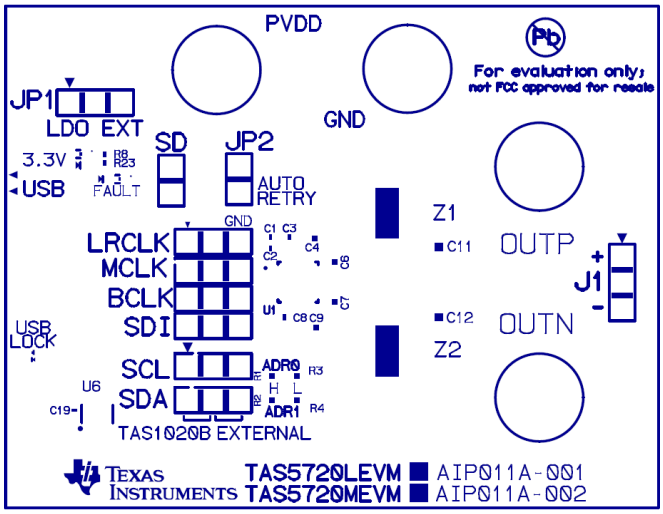

Figure 3. Top Silkscreen

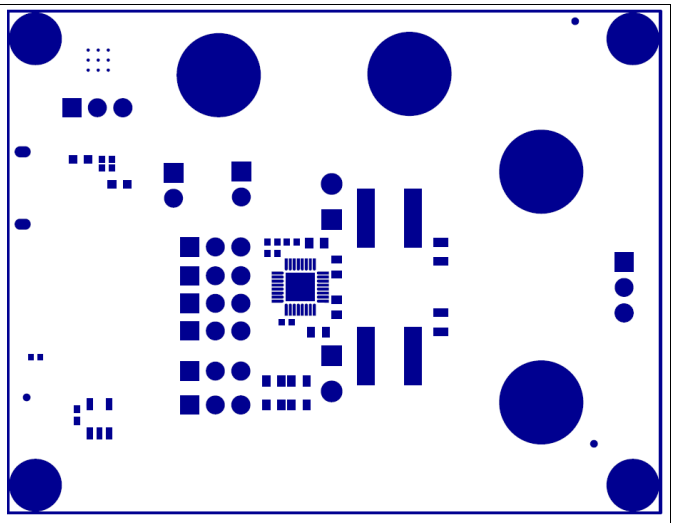

Figure 4. Top Solder Mask

Copyright © 2015, Texas Instruments Incorporated

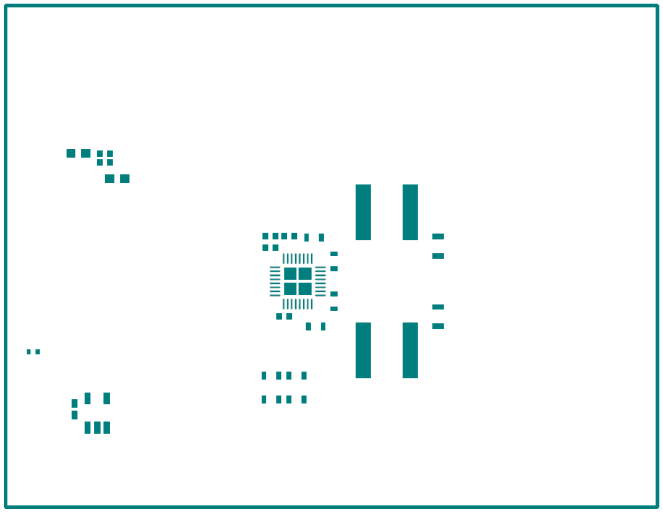

Figure 5. Top Solder Paste

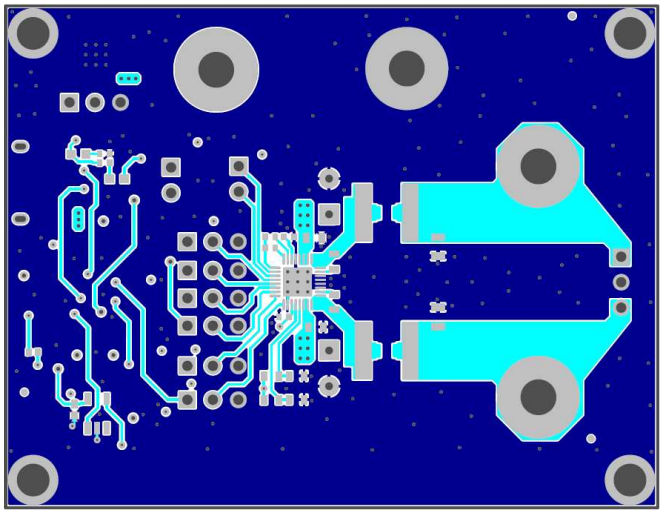

Figure 6. Top Layer

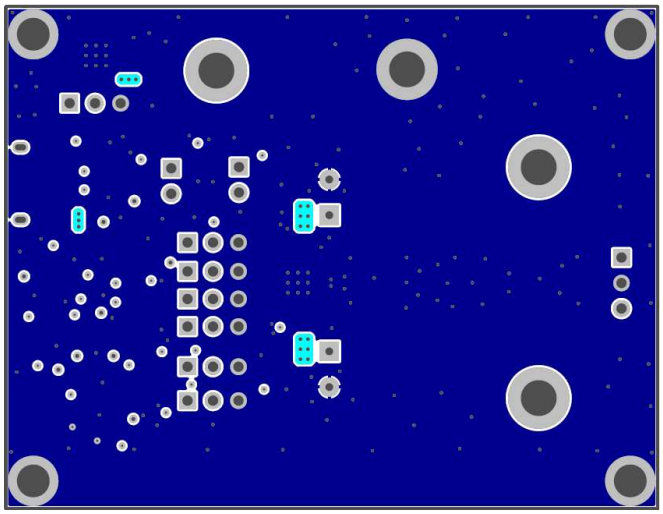

Figure 7. Layer 2

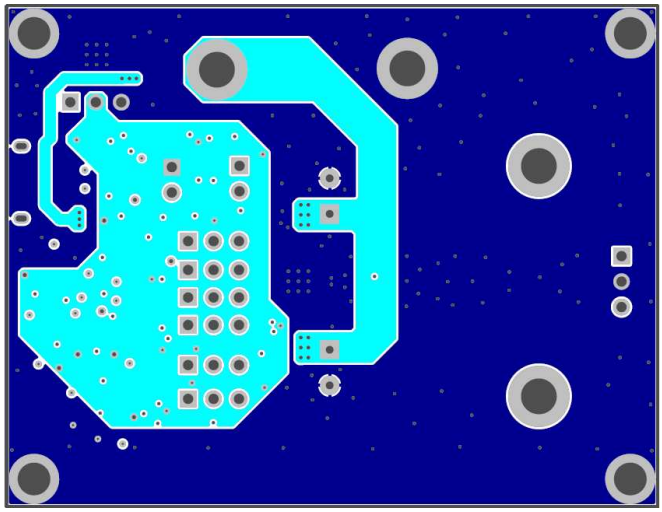

Figure 8. Layer 3

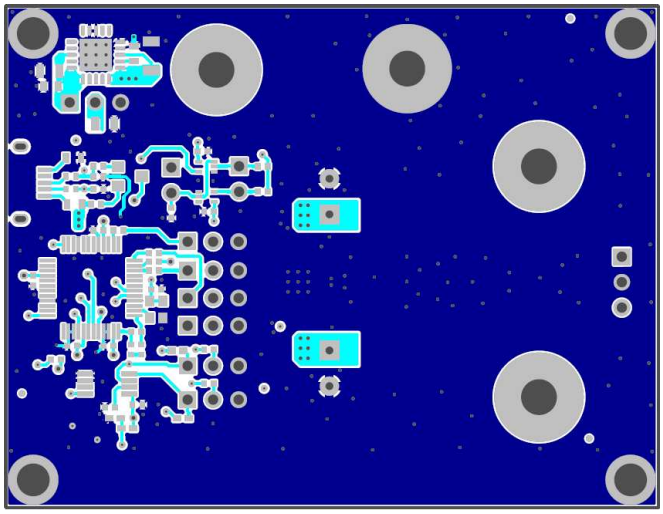

Figure 9. Bottom Layer

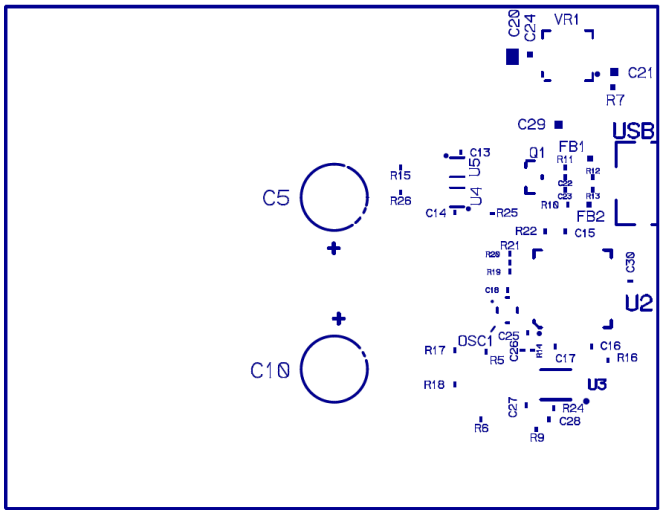

Figure 10. Bottom Silkscreen

Copyright © 2015, Texas Instruments Incorporated

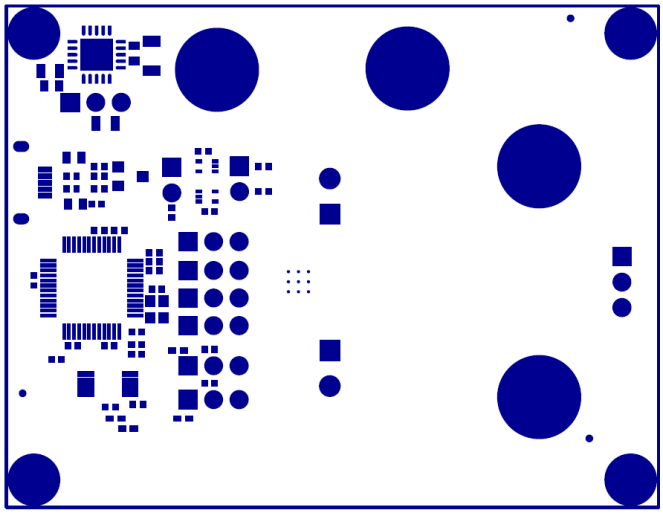

Figure 11. Bottom Solder Mask

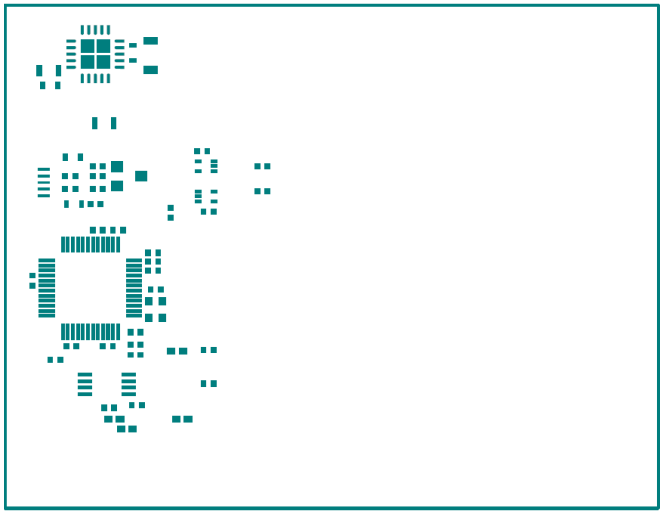

Figure 12. Bottom Solder Paste

6.3 TAS5720MEVM Bill of Materials

Table 6-1. Bill of Materials

ITEM	MANU PART NUM	MANU	QTY	REF DESIGNATORS	DESCRIPTION
1	TAS5720MRSM	TEXAS INSTRUMENTS	1	U1	DIGITAL INPUT MONO CLASS-D AUDIO AMPLIFIER QFN32-RSM ROHS
2	TAS1020BPFB	TEXAS INSTRUMENTS	1	U2	USB STREAMING CONTROLLER TQFP48-PFB ROHS
3	24LC256-I/MS	MICROCHIP	1	U3	SERIAL EEPROM I2 C 256 K 400 kHz MSOP8-MS ROHS
4	SN74LVC1G06DRLR	TEXAS INSTRUMENTS	1	U4	LOW POWER INVERTER OPEN DRAIN OUTS SOT553-DRL5 ROHS
5	SN74LVC1G125DRLR	TEXAS INSTRUMENTS	1	U5	SINGLE BUS BUFFER GATE WITH 3-STATE OUTPUT SOT553-DRL5 ROHS
6	TPS3825-33DBVR	TEXAS INSTRUMENTS	1	U6	PROCESSOR SUPERVISORY CIRCUITS 2.93 V 200 ms SOT23-DBV5 ROHS
7	TPS7A4700RGWT	TEXAS INSTRUMENTS	1	VR1	RF LDO VOLT REG, 36 V,1 A, 4.17 uVRMS QFN20-RGW ROHS
8	MMBT2222A-7-F	DIODES INC.	1	Q1	TRANSISTOR NPN GENERAL PURPOSE 40 V 1 A SOT23 DBV3 ROHS

Copyright © 2015, Texas Instruments Incorporated

Table 6-1. Bill of Materials (continued)

9	625L3I006M00000	CTS FREQUENCY CONTROLS	1	OSC1	OSCILLATOR SMT 6.0 MHz 3.3 V OUT-ENABLE ROHS
10	SMLP12BC7TT86	ROHM SEMICONDUCTOR	1	USB-LOCK	LED BLUE SMD0402 2.9 V 10 mA ROHS
11	LTST-C190EKT	LITE-ON INC.	1	FAULT	LED RED SMD0603 2.1 V 10 mA ROHS
12	LTST-C190GKT	LITE-ON INC.	1	3.3V	LED GREEN SMD0603 2.1 V 10 mA ROHS
13	C1005X5R1A105K	TDK CORP	3	C1, C2, C3	CAP SMD0402 CERM 1.0 UFD 10 V 10% X5R ROHS
14	C1608X7R1H104K	TDK	2	C4, C9	CAP SMD0603 CERM 0.1 UFD 50 V 10% X7R ROHS
15	EEU-FC1J470	PANASONIC	2	C5, C10	CAP THRU ALUM-ELECT FC SERIES 47 ufd 63 V 20% 8x3.5x11.5 mm ROHS
16	06033D224KAT2A	AVX	2	C6, C7	CAP SMD0603 CERM 0.22 UFD 25 V 10% X5R ROHS
17	GRM155R71C104KA88J	MURATA	10	C8, C13, C14, C15, C16, C17, C18, C19, C27, C30	CAP SMD0402 CERM 0.1 UFD 16 V X7R 10% ROHS
18	C2012X7R1H684M125AB	TDK	2	C11, C12	CAP SMD0805 CERM 0.68 UFD 50 V 20% X7R ROHS
19	GMK316AB7106KL-TR	TAIYO YUDEN	1	C20	CAP SMD1206 CERM 10 UFD 35 V 10% X7R ROHS
20	JMK212BJ476MG-T	TAIYO YUDEN	1	C21	CAP SMD0805 CERM 47 UFD 6.3 V 20% X5R ROHS
21	500R07N470JV4T	JOHANSON	2	C22, C23	CAP SMD0402 CERM 47 pfd 50 V 5% COG ROHS
22	GMK107BJ105KA-T	TAIYO YUDEN	1	C24	CAP SMD0603 CERM 1.0 UFD 35 V 10% X5R ROHS
23	CC0402JRNPO9BN101	YAGEO	1	C25	CAP SMD0402 CERM 100 pfd 50 V 5% NPO ROHS
24	GRM1555C1H102JA01D	MURATA	1	C26	CAP SMD0402 CERM 1000 pfd 5% 50 V COG ROHS
25	CGA2B2C0G1H100D050BD	DK CORP.	1	C28	CAP SMD0402 CERM 10 pfd 50 V +0.5 pfd COG ROHS
26	GRM21BR70J106KE76L	MURATA	1	C29	CAP SMD0805 CERM 10 UFD 6.3 V 10% X7R ROHS
27	MPZ1608S221A	TDK	2	FB1, FB2	FERRITE CHIP, 220 Ω 2 A 100 MHZ SMD 0603 ROHS

Copyright © 2015, Texas Instruments Incorporated

Table 6-1. Bill of Materials (continued)

28	ERJ-3GEY0R00V	PANASONIC	2	R3, R4	RESISTOR SMD0603 0.0 Ω 5% THICK FILM 1/10 W ROHS
29	ERJ-2RKF4991X	PANASONIC	4	R5, R6, R17, R18	RESISTOR SMD0402 4.99 K 1%,1/16 W ROHS
30	ERJ-3EKF1002V	PANASONIC	1	R7	RESISTOR SMD0603 10.0 K 1% THICK FILM 1/10 W ROHS
31	CRCW0402360RFKED	VISHAY	3	R8, R16, R23	RESISTOR SMD0402 360 1/16 W 1% ROHS
32	CRCW040210K0FKED	VISHAY	5	R9, R15, R24, R25, R26	RESISTOR SMD0402 10.0 K Ω 1% 1/16 W ROHS
33	RC0402FR-0715KL	YAGEO	1	R10	RESISTOR SMD0402 THICK FILM 15.0 K Ω 1% 1/16 W ROHS
34	RMCF0402FT1K50	STACKPOLE ELECTRONICS	1	R11	RESISTOR SMD0402 1.50K Ω 1% 1/16 W ROHS
35	ERJ-2RKF27R4X	PANASONIC	2	R12, R13	RESISTOR SMD0402 THICK FILM 27.4 Ω 1/10 W 1% ROHS
36	RC0402FR-073K09L	YAGEO	1	R14	RESISTOR SMD0402 THICK FILM 3.09 K Ω 1% 1/16 W ROHS
37	RC0402FR-0747RL	YAGEO	4	R19, R20, R21, R22	RESISTOR SMD0402 THICK FILM 47.0 Ω 1% 1/16 W ROHS
38	1255AY-150M	TOKO JAPAN	2	Z1, Z2	INDUCTOR SMT 15 µH 3.3 A 63 mΩ 20% DG6045C ROHS
39	PBC02SAAN	SULLINS	2	SD, JP2	HEADER THRU MALE 2 PIN 100 LS 120 TAIL GOLD ROHS
40	PBC03SAAN	SULLINS	8	J1, JP1, SCL, SDA, SDI, BCLK, MCLK, LRCLK	HEADER THRU MALE 3 PIN 100 LS 120 TAIL GOLD ROHS
41	ZX62WD1-B-5PC	HIROSE	1	USB	JACK USB FEMALE TYPEB MICRO SMT-RA 5PIN ROHS
42	7006	KEYSTONE ELECTRONICS	2	OUTP, PVDD	BINDING POST, RED, 15 A ECONO ROHS
43	7007	KEYSTONE ELECTRONICS	2	GND, OUTN	BINDING POST, BLACK, 15 A ECONO ROHS
44	969102-0000-DA	3M	11	J1, JP1, JP2, SCL, SD, SDA, SDI, BCLK, MCLK, LRCLK	SHUNT BLACK AU FLASH 0.100 LS OPEN TOP ROHS

Copyright © 2015, Texas Instruments Incorporated

Table 6-1. Bill of Materials (continued)

45	CRCW060322K1FKEA	VISHAY	0	R1, R2	RESISTOR SMD0603 22.1 K Ω 1% 1/10 W ROHS
46	2027	KEYSTONE ELECTRONICS	4	STANDOFFS	ROUND STANDOFF 4-40 ALUM 1/2" ROHS
47	PMSSS 440 0025 PH	B&F FASTENER	4	STANDOFF SCREWS	MACHINE SCREW PAN PHILLIPS 4-40 ROHS

Copyright © 2015, Texas Instruments Incorporated

IMPORTANT NOTICE

Texas Instruments Incorporated and its subsidiaries (TI) reserve the right to make corrections, enhancements, improvements and other changes to its semiconductor products and services per JESD46, latest issue, and to discontinue any product or service per JESD48, latest issue. Buyers should obtain the latest relevant information before placing orders and should verify that such information is current and complete. All semiconductor products (also referred to herein as “components”) are sold subject to TI’s terms and conditions of sale supplied at the time of order acknowledgment.

TI warrants performance of its components to the specifications applicable at the time of sale, in accordance with the warranty in TI’s terms and conditions of sale of semiconductor products. Testing and other quality control techniques are used to the extent TI deems necessary to support this warranty. Except where mandated by applicable law, testing of all parameters of each component is not necessarily performed.

TI assumes no liability for applications assistance or the design of Buyers’ products. Buyers are responsible for their products and applications using TI components. To minimize the risks associated with Buyers’ products and applications, Buyers should provide adequate design and operating safeguards.

TI does not warrant or represent that any license, either express or implied, is granted under any patent right, copyright, mask work right, or other intellectual property right relating to any combination, machine, or process in which TI components or services are used. Information published by TI regarding third-party products or services does not constitute a license to use such products or services or a warranty or endorsement thereof. Use of such information may require a license from a third party under the patents or other intellectual property of the third party, or a license from TI under the patents or other intellectual property of TI.

Reproduction of significant portions of TI information in TI data books or data sheets is permissible only if reproduction is without alteration and is accompanied by all associated warranties, conditions, limitations, and notices. TI is not responsible or liable for such altered documentation. Information of third parties may be subject to additional restrictions.

Resale of TI components or services with statements different from or beyond the parameters stated by TI for that component or service voids all express and any implied warranties for the associated TI component or service and is an unfair and deceptive business practice. TI is not responsible or liable for any such statements.

Buyer acknowledges and agrees that it is solely responsible for compliance with all legal, regulatory and safety-related requirements concerning its products, and any use of TI components in its applications, notwithstanding any applications-related information or support that may be provided by TI. Buyer represents and agrees that it has all the necessary expertise to create and implement safeguards which anticipate dangerous consequences of failures, monitor failures and their consequences, lessen the likelihood of failures that might cause harm and take appropriate remedial actions. Buyer will fully indemnify TI and its representatives against any damages arising out of the use of any TI components in safety-critical applications.

In some cases, TI components may be promoted specifically to facilitate safety-related applications. With such components, TI’s goal is to help enable customers to design and create their own end-product solutions that meet applicable functional safety standards and requirements. Nonetheless, such components are subject to these terms.

No TI components are authorized for use in FDA Class III (or similar life-critical medical equipment) unless authorized officers of the parties have executed a special agreement specifically governing such use.

Only those TI components which TI has specifically designated as military grade or “enhanced plastic” are designed and intended for use in military/aerospace applications or environments. Buyer acknowledges and agrees that any military or aerospace use of TI components which have ***not*** been so designated is solely at the Buyer's risk, and that Buyer is solely responsible for compliance with all legal and regulatory requirements in connection with such use.

TI has specifically designated certain components as meeting ISO/TS16949 requirements, mainly for automotive use. In any case of use of non-designated products, TI will not be responsible for any failure to meet ISO/TS16949.

Products		**Applications**	
Audio	www.ti.com/audio	Automotive and Transportation	www.ti.com/automotive
Amplifiers	amplifier.ti.com	Communications and Telecom	www.ti.com/communications
Data Converters	dataconverter.ti.com	Computers and Peripherals	www.ti.com/computers
DLP® Products	www.dlp.com	Consumer Electronics	www.ti.com/consumer-apps
DSP	dsp.ti.com	Energy and Lighting	www.ti.com/energy
Clocks and Timers	www.ti.com/clocks	Industrial	www.ti.com/industrial
Interface	interface.ti.com	Medical	www.ti.com/medical
Logic	logic.ti.com	Security	www.ti.com/security
Power Mgmt	power.ti.com	Space, Avionics and Defense	www.ti.com/space-avionics-defense
Microcontrollers	microcontroller.ti.com	Video and Imaging	www.ti.com/video
RFID	www.ti-rfid.com		
OMAP Applications Processors	www.ti.com/omap	**TI E2E Community**	e2e.ti.com
Wireless Connectivity	www.ti.com/wirelessconnectivity		

Mailing Address: Texas Instruments, Post Office Box 655303, Dallas, Texas 75265
Copyright © 2016, Texas Instruments Incorporated